Simplex

KEENCUT

The lightweight, portable cutter

Remove the safety risk of using a hand knife by adding the lightweight Keencut Simplex to your tool kit. Ideal in the workshop or on-site, the Simplex offers safe, straight cutting in any environment.

For optimum workflow in the busy workshop, combine the Keencut Simplex and the Keencut Evolution3™. The Simplex provides non-fixed flexible straight-line cutting leaving the Evolution3™ to tackle high volume, high accuracy tasks.

The Simplex is very adaptable, providing the safe, accurate cutting of a wide variety of semi-rigid and flexible materials up to 3.1 metres (124″) wide, with a cutting depth of up to 10mm (3/8″) depending on the material.

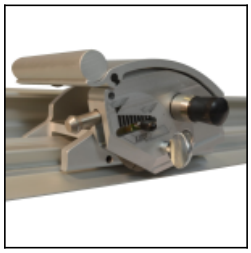

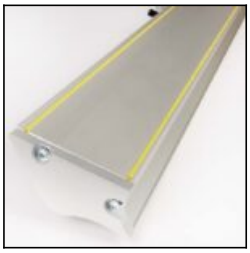

Materials cut

Semi-rigid materials

PVC foamboard ≤ 6mm (1/4″)

Corrugated/fluted plastic ≤ 10mm (3/8″)

Corrugated cardboard ≤ 10mm (3/8″)

Foam centred board ≤ 10mm (3/8″)

Flexible materials

Banners

Magnetic sheet

Film

Self-adhesive vinyl

Textiles and delicate materials, with optional fabric cutter attachment

MADE IN BRITAIN®

The world's finest cutting machines

www.keencut.com
+44 (0) 1536 263158 sales@keencut.co.uk

Scan for further information
https://www.keencut.com/product/simplex/

Simplex

KEENCUT

- Portable, lightweight, and robust
- Overcomes hazards of portable cutting
- No movement of material during cutting
- Guaranteed to cut within 1.0mm (0.004″) of a straight-line
- Optional textile cutter
- Ergonomic rocker head for ease-of-use
- Push or pull cutting action
- Immediate out of the box accuracy
- Cutting mat required
- Five-year guarantee

Built to be portable

The Simplex is lightweight and robust and can withstand the rigours of on-site working whilst being truly portable. By manufacturing in-house, with only the highest quality materials, Keencut can guarantee that the Simplex will provide reliable long-lasting and accurate service. The Simplex also has a comprehensive five year guarantee.

The versatile cutter

The Simplex is very adaptable providing the safe, accurate cutting of a wide variety of rigid, semi-rigid and flexible materials up to 3.1 metres (124″) wide. The utility blades will cut to a depth of 10mm (3/8″). By adding the optional textile cutter, the material range of the Simplex is extended to delicate materials. There are 5 Simplex model sizes to choose from and a cutting mat is required for safe operation. Please note, the cutting mat is not supplied.

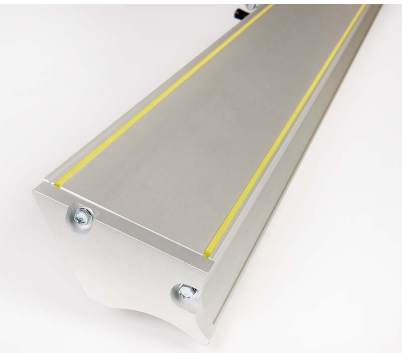

Perfect accuracy

The Simplex is guaranteed to cut within 1.0mm (0.004″) of a straight line for the whole length of the cutter. The soft silicone cord on the underside of the cutter grips and protects materials whilst preventing any movement during use. The Simplex is calibrated for immediate 'out of the box' accuracy and is designed to remain accurate with only minimum maintenance.

Safety by design

The Simplex overcomes the safety hazards of using other methods of portable cutting. It removes the need for using a hand knife and straight edge where users risk the blade slipping away from the straightedge or overshooting at the end of the cut. With the Simplex the blade instantly retracts when not in use.

MADE IN BRITAIN®

The world's finest cutting machines

www.keencut.com
+44 (0) 1536 263158 sales@keencut.co.uk

Scan for further information
https://www.keencut.com/product/simplex/

Simplex

KEENCUT

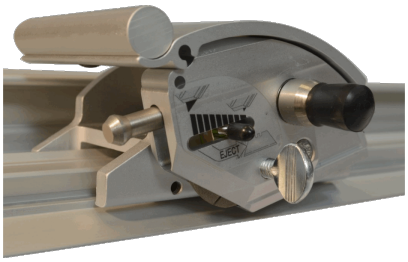

Easy to use

Everything has been considered to ensure ease-of-use and reduce user fatigue. An ergonomic rocker style cutting head is designed for left or right-handed use, and the blade can be pulled or pushed, as appropriate for the material being cut.

Five year guarantee

By manufacturing in-house, with only the highest quality materials, Keencut can guarantee that the Simplex will provide reliable long-lasting and accurate service. All Keencut products are offered with a comprehensive five year guarantee. Register your product to activate your guarantee >

In the box

100 medium duty utility blades

Dimensions

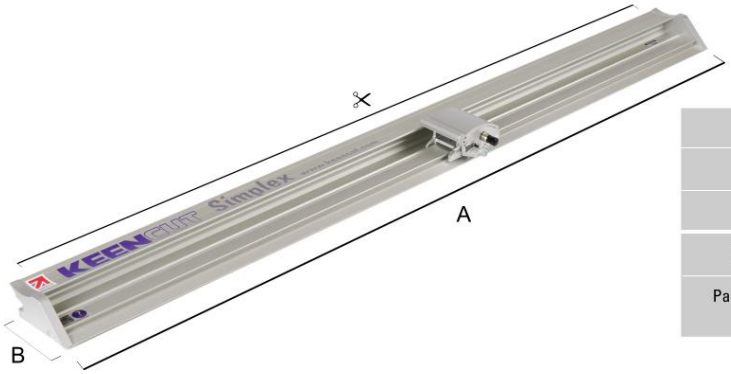

	SIM110	SIM160	SIM210	SIM260	SIM310
Cut Length cm (")	110 (44)	160 (64)	210 (84)	260 (104)	310 (124)
A cm (")	127 (50)	177 (70.75)	227 (89.5)	277 (109.25)	327 (128.75)
B cm (")	11 (4.4)	11 (4.4)	11 (4.4)	11 (4.4)	11 (4.4)
Packed Weight KG (lbs)	4 (9)	6 (13)	7 (15)	21 (46)	26 (57)
Packed Dimensions cm (")	139x17x16 (55x7x6)	190x17x16 (75x7x6)	237x17x16 (93x7x6)	289x20x17 (114x8x7)	338x20x17 (133x8x7)

MADE IN BRITAIN

The world's finest cutting machines

www.keencut.com
+44 (0) 1536 263158 sales@keencut.co.uk

Scan for further information
https://www.keencut.com/product/simplex/