Evolution3™ FreeHand

KEENCUT

Evolution3 accuracy in a portable cutter

The Evolution3™ FreeHand gives fast, quality, accurate cutting in a more flexible format. It's perfect for a workshop where the cutter bar is required to move between workbenches.
The Evolution3™ FreeHand has all the QuikSwap tool heads and will cut anything from 6mm foam board to delicate fabrics.
Ultra-high guaranteed 0.2mm (0.008″) cutting accuracy, and perfect blade control ensure a fast, clean finish and reduce wasted materials.
Cutting with no dust or debris, the Evolution3™ FreeHand is safely used in vinyl application areas without fear of particles damaging the finish.

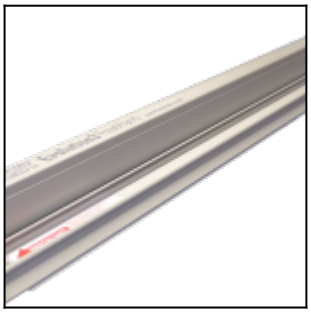

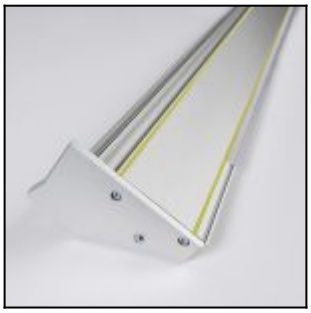

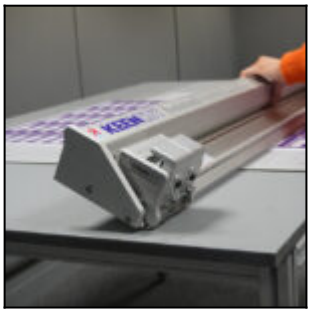

Materials cut

Semi-rigid materials

Corrugated cardboard ≤ 6mm (1/4″)
PVC foamboard ≤ 6mm (1/4″)
Corrugated plastic ≤ 6mm (1/4″)
Foam centred board ≤ 6mm (1/4″)

Rigid materials

Cast acrylic / Plexiglas ≤ 3mm (3/32″) scoring only

Flexible materials

Banners
Pop-ups
Magnetic sheets
Film
Self-adhesive vinyls

Evolution3™ FreeHand

KEENCUT

Which E3 cutter should I buy?

- Simple, precision alignment reduces waste and saves time
- Clean quality cuts with no dust or debris
- Single person operation
- Cutting, creasing and fabric cutting
- Safety by design
- 5-year guarantee

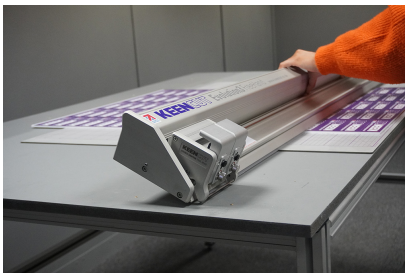

Guaranteed accuracy

The Evolution3 is the most accurate cutter of its type on the market and is guaranteed to cut within 0.2mm (0.008″) of a straight line for the length of the cut. The in-built ultra-precision accuracy combined with the perfect alignment, made possible using the sightline strip, means every butt-jointed panel will join seamlessly. This ultra-precision accuracy will save you time and money with less waste and fewer mistakes.

Total stability

The self-adjusting track roller system fitted to the QuikSwap tool heads provides a strong and smooth movement up and down the length of the cutter bar, with zero sideways movement to ensure a perfect straight line. This, coupled with rigid blade clamping gives perfect blade control and spot-on accuracy, so less wastage and mistakes. On the FreeHand, the underside of the cutter bar has two silicone strips that will grip to the material surface preventing any chance of it slipping.

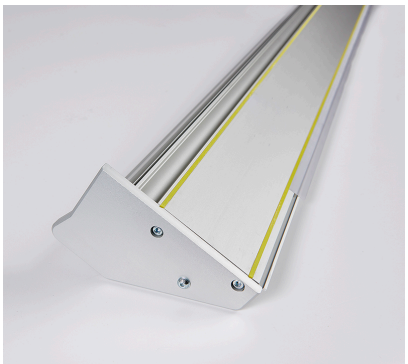

Simple to use

The ease of use makes it possible for even first time users to cut confidently and accurately with the Evolution3 FreeHand. The sightline strip guides you to achieve perfect accuracy and the heavy base and solid structure create a stable cutting platform.

Heavy duty reliability

The entire Evolution3 range has been built to last using high quality materials and well tested engineering principles. The cutting head bearing system guarantees perfect blade control even with the most difficult of materials. Keencut make the majority of components on its high-tech CNC machines keeping tolerances and quality under constant control, this assures exceptional accuracy and total reliability.

MADE IN BRITAIN®

The world's finest cutting machines

www.keencut.com
+44 (0) 1536 263158 sales@keencut.co.uk

Scan for further information
https://www.keencut.com/product/evolution3-freehand/

Evolution3™ FreeHand

KEENCUT

QuikSwap Double Graphik tool head

The Evolution3 Double Graphik tool head comes as standard and has two individual blade holders for two-way cutting. The blades are stronger and more stable than regular blades making the Double Graphik tool ideal for vinyl, banner, cardboard, PVC foamboard up to 13mm (1/2″), foam-centred board, corrugated plastic, paper, pop-up and roll-up materials.

Discover Evolution3 Graphik tool head >

Optional Evolution3 tool heads

Evolution3 QuikSwap tool heads give users the ultimate flexibility. Each tool is designed for a specific purpose and can be attached or detached from the cutter in seconds

Evolution3 Fabric tool head is ideal for cutting fabric, paper, film, vinyl, banners and delicate materials. With the Evolution3 BenchTop and FreeHand, the Fabric tool head should be used in conjunction with a cutting mat. Discover Evolution3 Fabric tool head >

Evolution3 Rocker tool head is a general-purpose tool for cutting materials such as banners, cardboard and foamboard up to 10mm (3/8″). A Tech-D.012 blade can be used for the occasional cutting of aluminium composite panels, such as Dibond or Alupanel. Discover Evolution3 Rocker tool head >

Evolution3 Creaser tool head will crease in both directions and is ideal for stout paper, card, cardboard, and grey board. Discover Evolution3 Creaser tool head >

Five year guarantee

Like all Keencut machines, the Evolution3 is precision built using top quality materials. All components are manufactured in-house to ensure quality and Evolution3 cutters come with a five year comprehensive guarantee. Register your product to activate your guarantee >

In the box

100 Graphik blades
Double Graphik tool head (mounted)

Dimensions

MADE IN BRITAIN

The world's finest cutting machines

www.keencut.com
+44 (0) 1536 263158 sales@keencut.co.uk

Scan for further information
https://www.keencut.com/product/evolution3-freehand/

Evolution3™ FreeHand

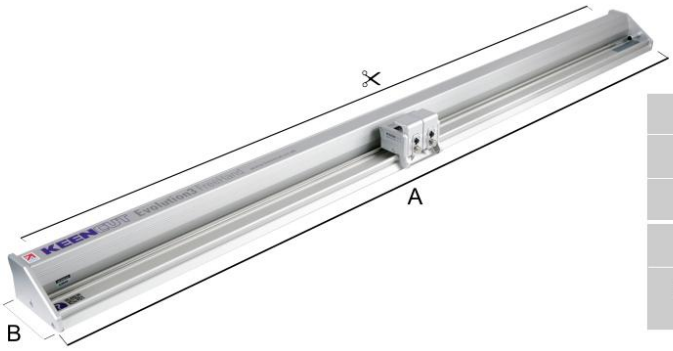

	E3FH110	E3FH160	E3FH210	E3FH260	E3FH310
Cut Length cm (")	110 (44)	160 (64)	210 (84)	260 (104)	310 (124)
A cm (")	142 (56)	192 (75.5)	242 (95)	292 (115)	342 (134.5)
B cm (")	15.5 (6)	15.5 (6)	15.5 (6)	15.5 (6)	15.5 (6)
Packed Weight KG (lbs)	22 (48.5)	28 (62)	34 (75)	40 (88)	46 (101)
Packed Dimensions cm (")	154x35x17 (61x14x7)	204x35x17 (80x14x7)	254x35x17 (100x14x7)	304x35x17 (120x14x7)	3354x35x17 (140x14x17)